NOTE :-

1. IN ORDER TO MAINTAIN THE HEIGHTS FROM GATE TOP TO CENTRE LINE OF HYDRAULIC CYLINDER, SITE MAY HAVE TO MODIFY FOUNDATIONS TO SUIT.

2. CENTRE LINE OF CRANK LEVER & HYDRAULIC CYLINDER TO BE 295mm BELOW COPING LEVEL.

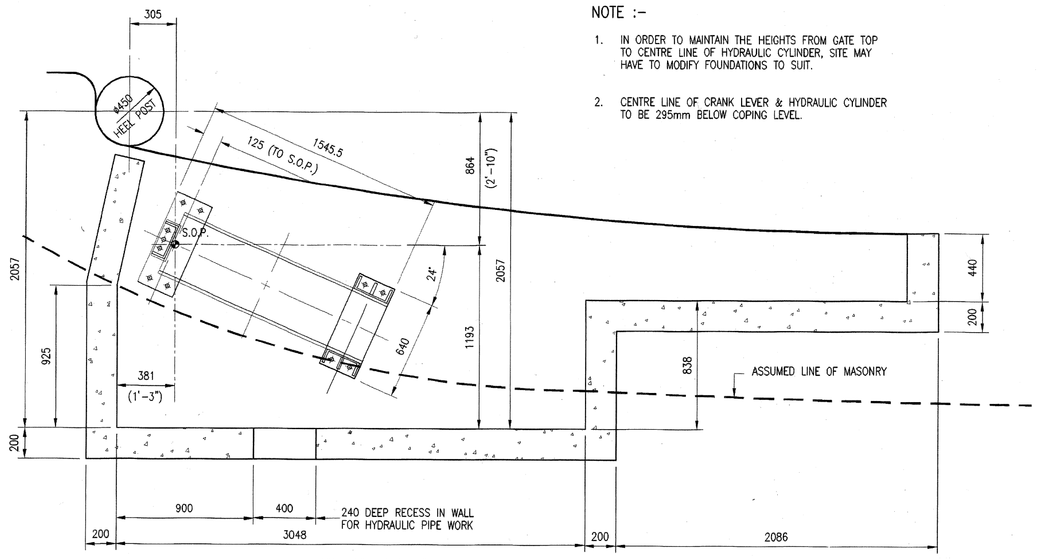

RAM PIT FOUNDATION PLAN
(1:20)

NOTE :-

PANELS TO BE SLOTTED UNDER GLASS REINFORCED PLASTIC L100x55x10 (CANAL SIDE) & LOWERED ONTO GLASS REINFORCED PLASTIC CHANNEL 152x43x10 (WALL SIDE)

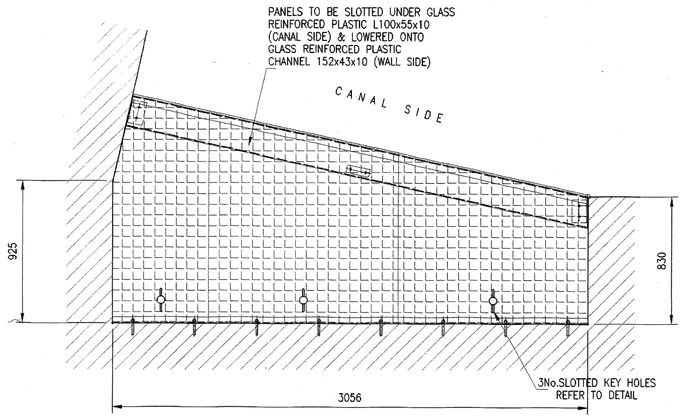

DETAILS OF FLOORING LAYOUT
(1:20)

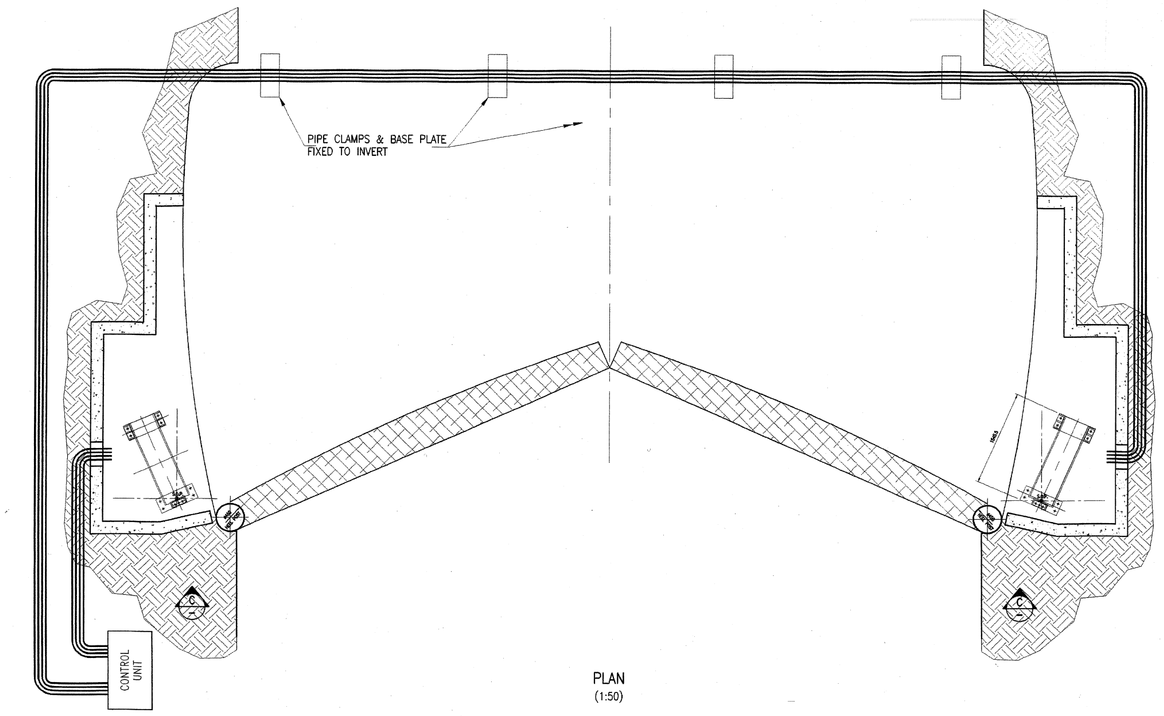

PLAN
(1:50)

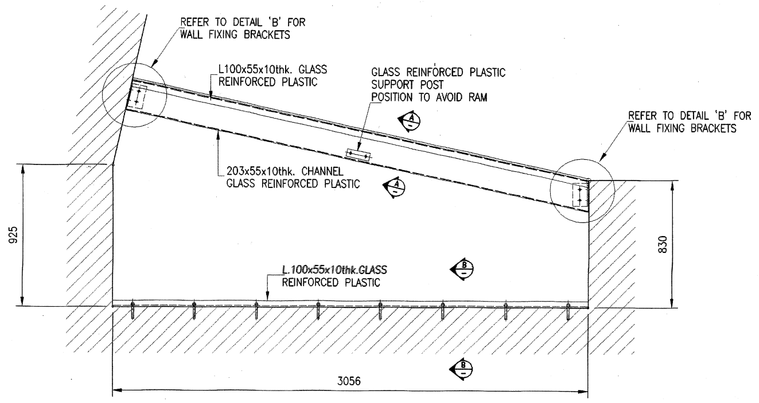

DETAILS OF SUPPORT FRAMEWORK UNDER FLOORING
(1:20)

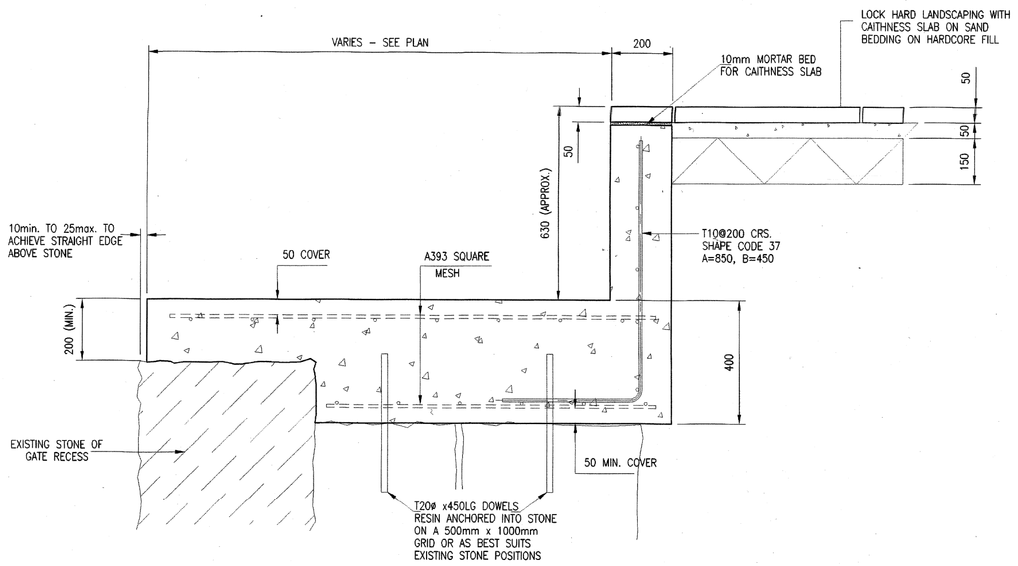

CROSS SECTION THROUGH LOCK GATE RAM PIT
(RAM PIT COVER NOT SHOWN)
(1:10)

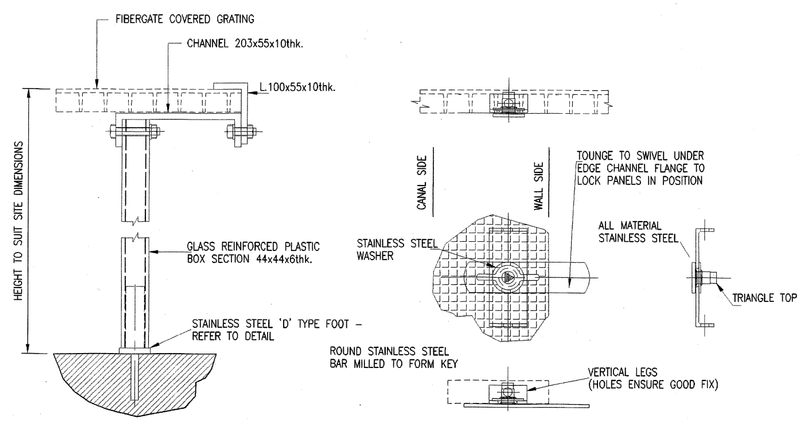

SECTION 'A - A'
DETAIL OF SUPPORT POST
(1:5)

DETAIL OF SWIVEL FIXING
(1No. REQUIRED ON EACH OF 3 PANELS
(1:5)

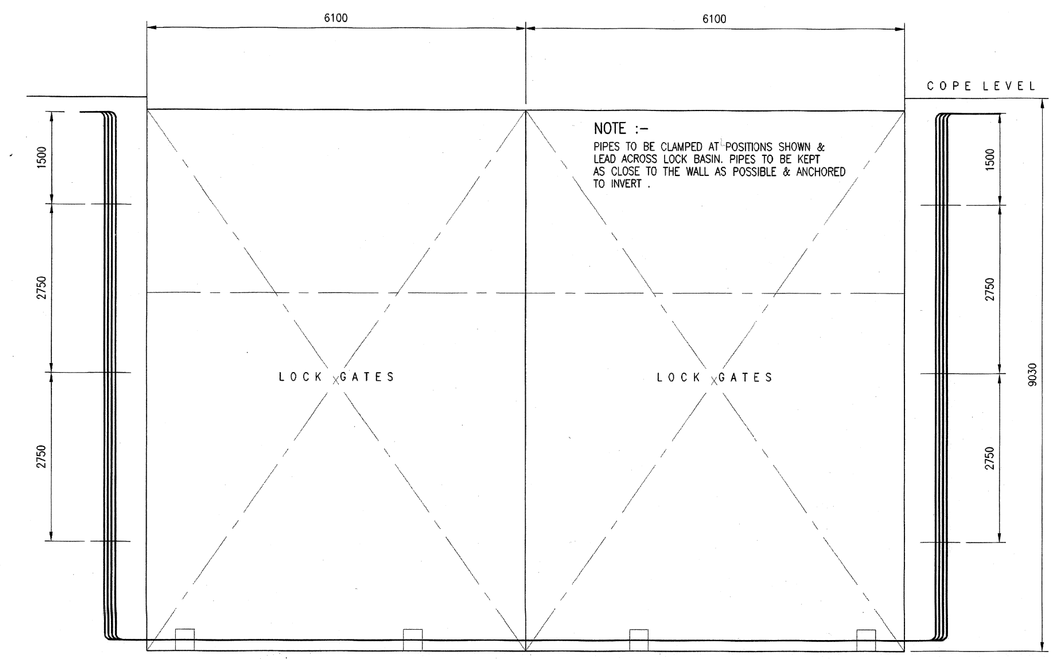

ELEVATION C - C
(1:50)

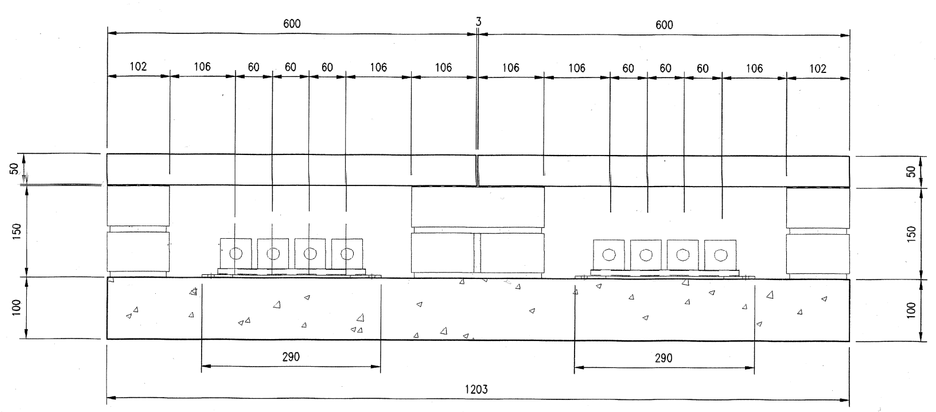

LOCK GATE HYDRAULIC PIPE DUCT (DOUBLE)
(1:5)

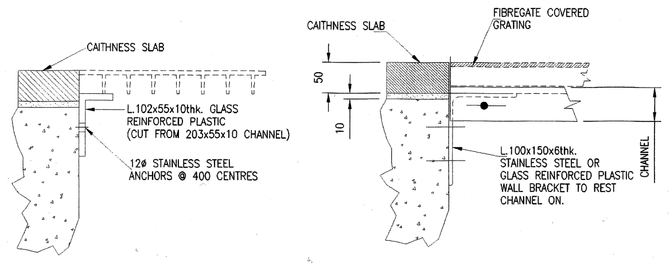

SECTION 'B - B'
DETAIL OF SHELF ANGLE
(1:5)

CHANNEL TO WALL FIXING BRACKETS
DETAIL 'B'
(1:5)

NOTES :-

1. SWIVEL FIXINGS TO HAVE VERTICAL LEGS RESIN BONDED INTO UNDERSIDE OF GRATING VOIDS.

2. 2No.LIFTING EYES TO BE SUPPLIED FOR EACH LOCATION & FOR EACH MAINTENANCE TEAM

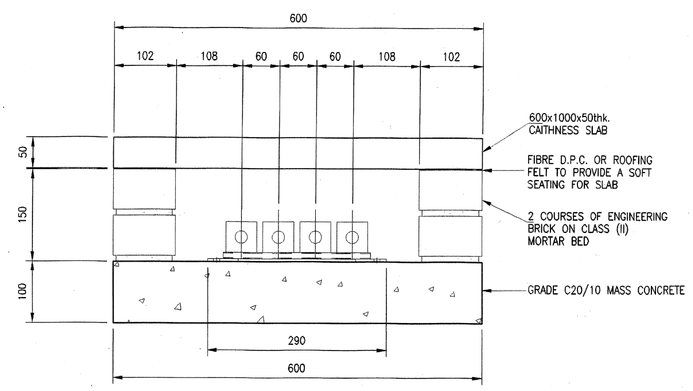

LOCK GATE HYDRAULIC PIPE DUCT (SINGLE)
(1:5)

NOTES :-

1. 20mm STAINLESS STEEL HYDRAULIC PIPE WORK TO BE CLAMPED USING PROPRIETARY FITTINGS & STAINLESS STEEL CHANNEL BOLTED TO CONCRETE.

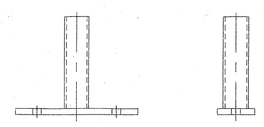

STAINLESS STEEL
'D' TYPE FOOT
(1:5)

NOTES:-

REV	DATE	DESCRIPTION	SIGN	APP.
A	07/02/02	RAM PIT FOUNDATION AMENDED & ALTERED ON PLAN	A.W.W.	A.W.D.R.

British Waterways Scotland

ENGINEER SCOTLAND
CANAL HOUSE
APPLECROSS STREET
GLASGOW G4 9SP

CALEDONIAN CANAL
LOCK GATE RAM PIT & COVER DETAILS

DRAWN BY	A.W.WATSON	SCALES :- 1:20 1:10 1:5	DATE JANUARY 2000
CHECKED BY	ANDREW W.D.ROSS	DRAWING No. CC002	REV- A
APPROVED BY	ANDREW W.D.ROSS		

A0 ORIGINAL

CAD FILE :- CC2.dwg