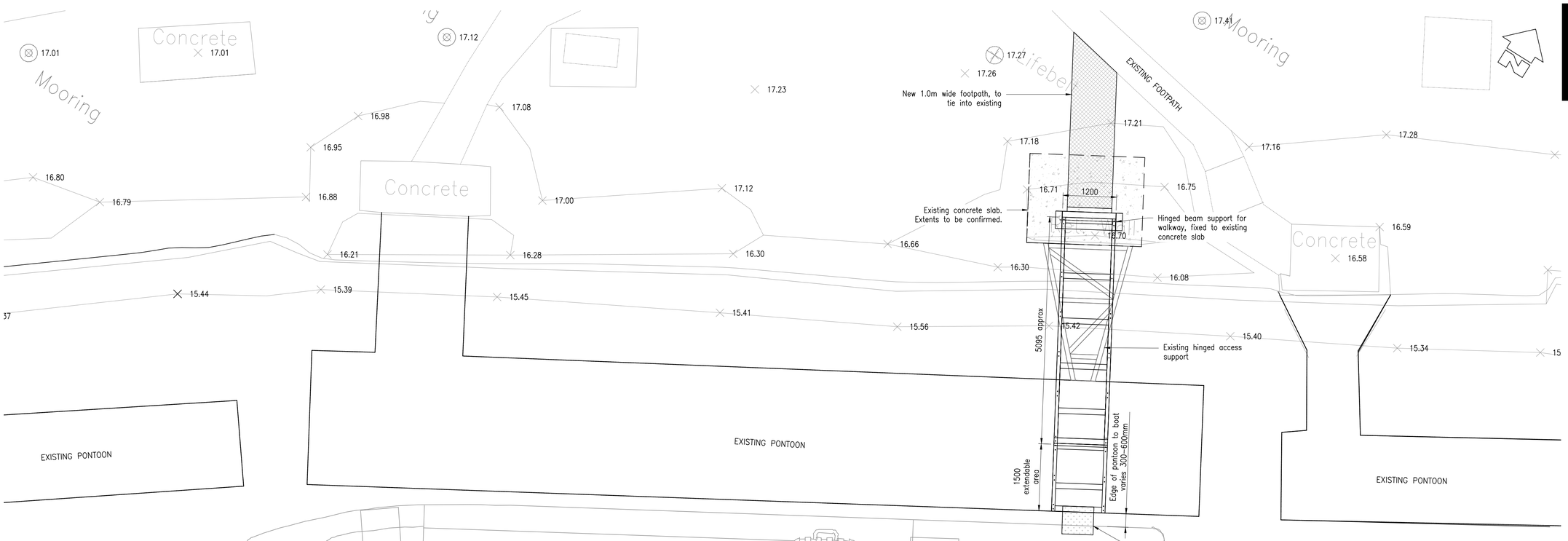

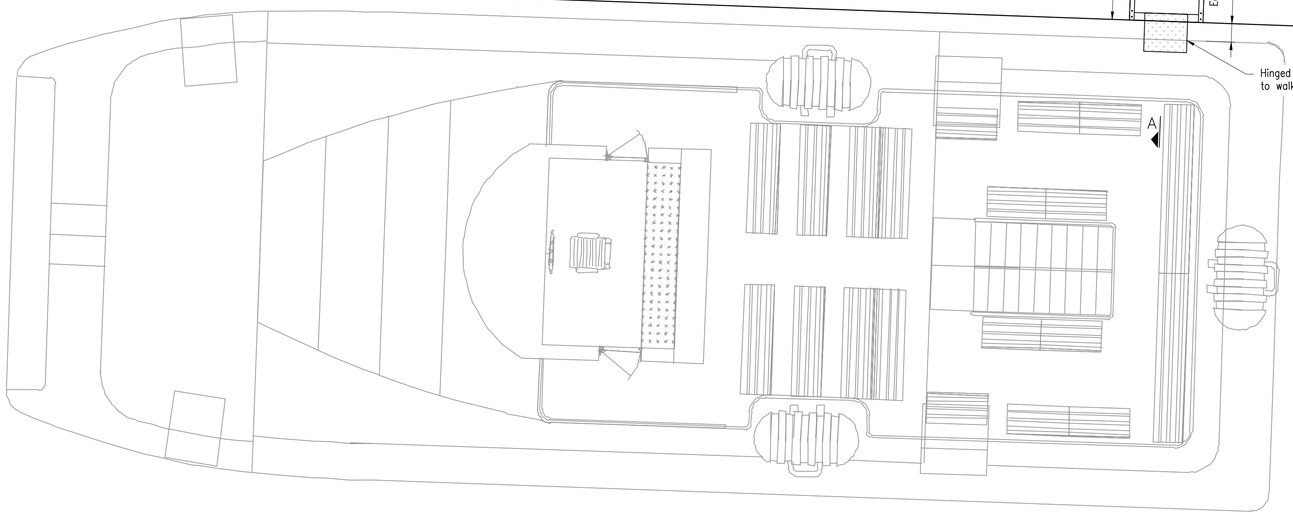

Layout Plan
Scale 1:50

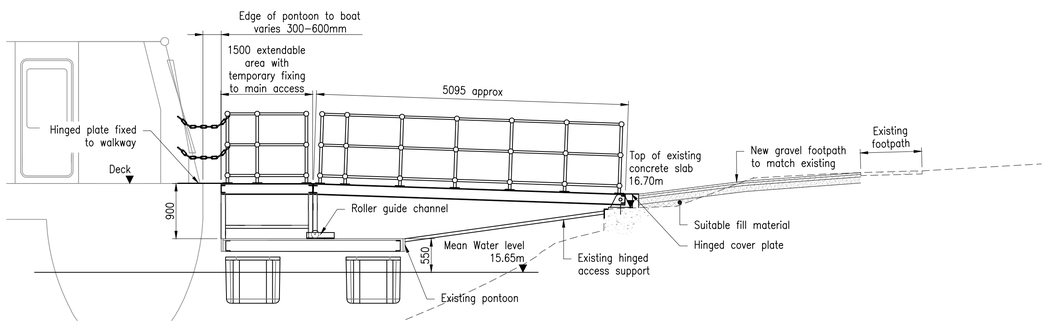

Section A–A
Scale 1:50

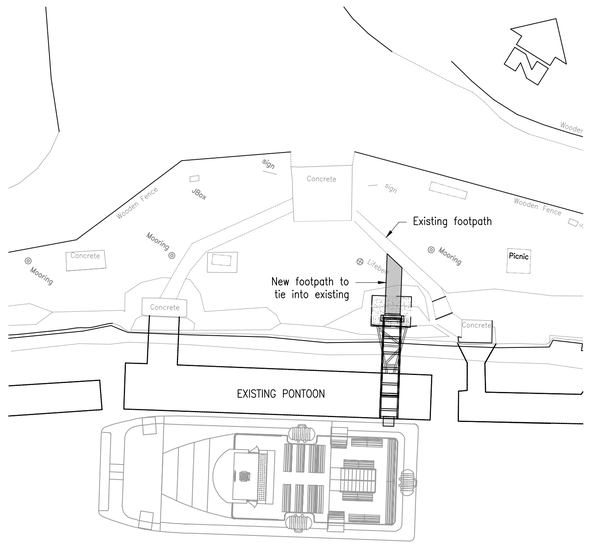

Site Plan
Scale 1:200

[redacted]

Client:
JACOBITE CRUISES LTD

Project:
NEW JETTY AT DOCHGARROCH LOCKS

Drawing
TEMPORARY ACCESS

Drawing No.	Drawn By
147243/09	DM
	Date 25/11/15
	Scale As Shown

Revisions	Date	By

This drawing is copyright of
A.F.Cruden Associates