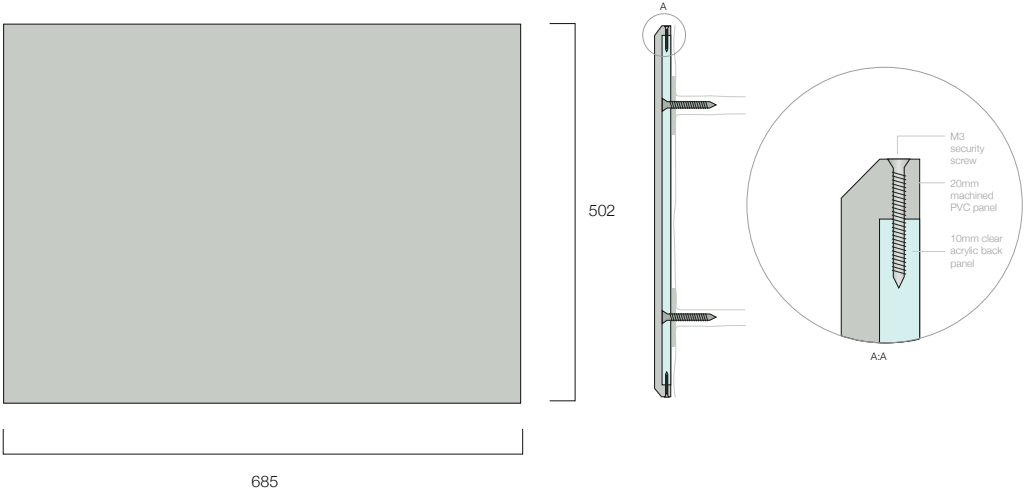
502
685
A
M3
security
screw
20mm
machined
PVC panel
10mm clear
acrylic back
panel
A:A